MOELLER PRECISION TOOL

TRUE STRIP™

U.S. PATENT 7,581,475
EUROPEAN PATENT 1922191
CHINESE PATENT ZL200680033120.3
ADDITIONAL INTERNATIONAL PATENTS PENDING

THE WORLD'S HIGHEST PERFORMANCE STANDARD MECHANICAL PUNCH STRIPPER

CERTIFIED ISO 9001:2008

M-CAD DESIGN

INCH / METRIC CATALOG

TRUE STRIP™

U.S. PATENT 7,581,475 • EUROPEAN PATENT 1922191 • CHINESE PATENT ZL200680033120.3
ADDITIONAL INTERNATIONAL PATENTS PENDING

- **Fits standard Heavy and Light Duty Ball Lock and Shoulder Style Retainers.**
- **Exclusive preloaded die spring for extended life.**
- **A variety of springs are available for a wide range of stripping forces. See page 11 for details.**
- **Custom strippers for contoured panels, multi-hole punches and non-marring applications.**
- **Eliminates expensive custom stripper plates.**
- **The industries strongest and most accurate off the shelf mechanical stripper.**
- **Innovative One-Piece, self-contained construction.**
- **Special multi-hole retainer designs available upon request.**

BENEFITS & FEATURES:

The stripper is precision fit to the housing and slides on both the body and shoulder to provide a **dual guiding condition** guaranteeing stability during the entire stroke.

The traveling manganese bronze stripper is shock resistant, non-marring and self-lubricating.

The housing is made from durable pre-hardened steel finished with black oxide for corrosion resistance. Critical operating surfaces are precisely machined providing superb squareness and alignment which assures long life even under side load conditions.

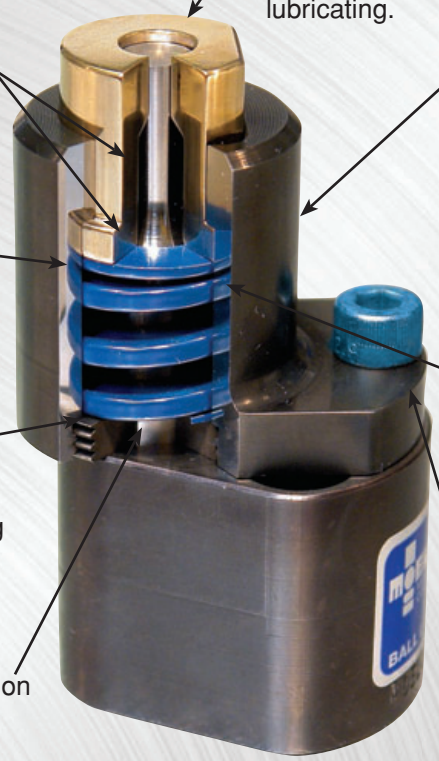

The stripper unit's housing is precision bored and roller burnished to a high micro finish providing smooth stripper guidance and support.

The stripper mechanical die spring assures optimal stripping forces and maximum life. There are four spring types available offering the ability to adjust stripping forces to match special applications.

The spring cap is installed using a hex wrench tool and is threaded to a positive stop, which provides a flush mounting surface and preloads the spring for optimal life.

The spring cap has a precision slip fit to the punch shank accurately locating the assembly.

The attachment foot is designed to fully isolate all stripping forces and side load **increasing punch life.**

CLUSTER PUNCH RETAINER ASSEMBLY

40.0 mm Punch Shank Diameter Example

32.0 mm Punch Shank Diameter Example

Standard Units Adapted to Existing Special Retainer

Special Factory Design for Specific Applications

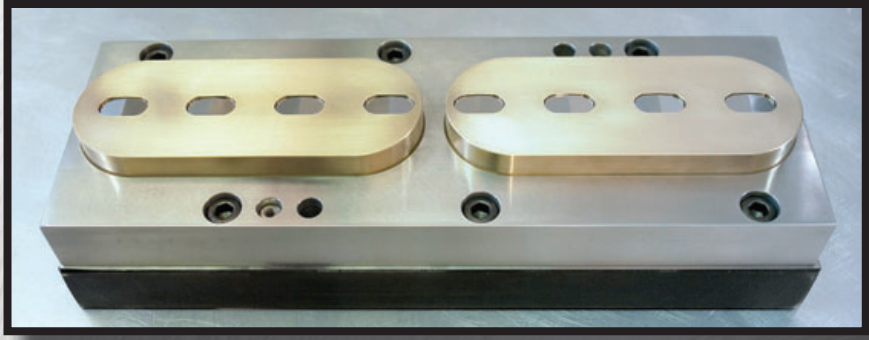

ENGINEERING & DESIGN PROVIDED

STANDARD STYLE RETAINER

HEAVY DUTY BALL LOCK

METRIC

TRUE STRIP™

U.S. PATENT 7,581,475 • EUROPEAN PATENT 1922191 • CHINESE PATENT ZL200680033120.3 • ADDITIONAL INTERNATIONAL PATENTS PENDING

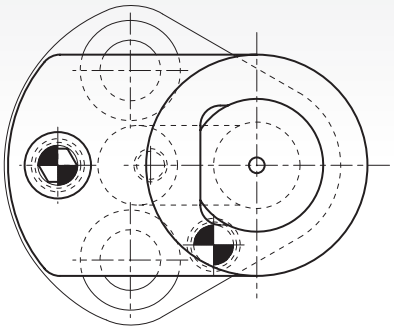

SPECIFY AT TIME OF ORDER:

- If retainer and punch are required, please purchase as additional line items at time of order.
- If panel contour is required on stripper face, please specify at time of order and provide surface data. P.O.R.
- Denote punch point dimensions at time of order for factory machining.

STANDARD UNIT

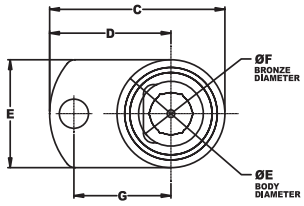

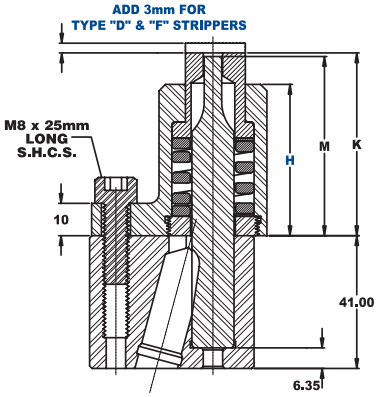

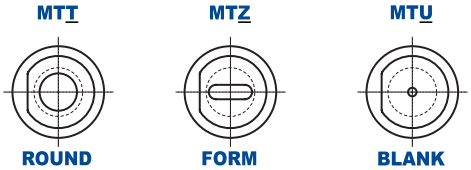

SIZE	PUNCH			PUNCH SHANK DIA.	PUNCH LENGTH			PUNCH STRIPPER			LONG REACH
METRIC	BALL LOCK										
	ROUND	FORM	BLANK								
M	T	Z	U		80	90	100	B	D	F	LR

MTT 10 – 80 / SB / LR

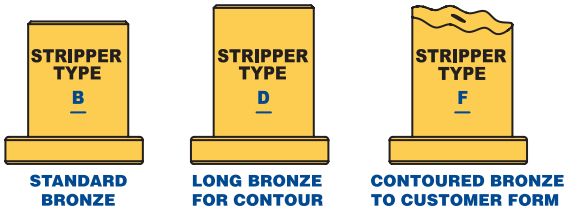

LR
LONG REACH / COMPACT UNIT

Note: Only available in 90mm & 100mm lengths

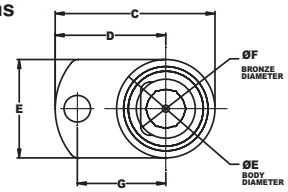

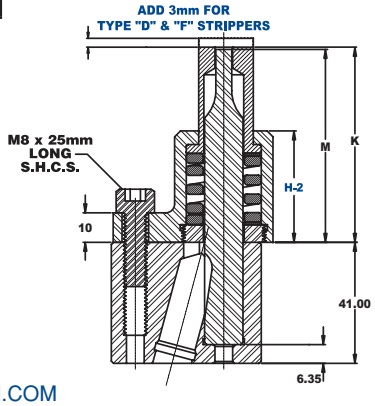

CAD FILES AVAILABLE FOR DOWNLOAD AT WWW.MOELLERPUNCH.COM

COMPLETE ASSEMBLY CATALOG NO.	C	D	E	F	G	H	H-2	K	M	STANDARD MAX TRAVEL FROM K-DIM. [BLUE]	LONG REACH/ COMPACT MAX TRAVEL FROM K-DIM. [BLUE]	STANDARD MAX TRAVEL FROM K-DIM [RED]	LONG REACH/ COMPACT MAX TRAVEL FROM K-DIM. [RED]
MT_10-80/S__	47.4	33.9	27	15	26.9	37.74		45.7	45.1	8.3		6.3	
MT_10-90/S__						46.74	37.74	55.7	55.1		8.3		6.3
MT_10-100/S__						54.52		65.7	65.1	11.1		8.4	
MT_13-80/S__	54.1	37.5	33.3	20	30	37.74		45.7	45.1	8.0		6.5	
MT_13-90/S__						46.74	37.74	55.7	55.1		8.0		6.5
MT_13-100/S__						54.52		65.7	65.1	10.9		8.5	
MT_16-80/S__	58.7	38.7	40	27	31.8	37.74		45.7	45.1	9.4		7.4	
MT_16-90/S__						46.74	37.74	55.7	55.1		9.4		7.4
MT_16-100/S__						54.52		65.7	65.1	13		9.5	
MT_20-80/S__	65.4	42.4	46.1	33	33.5	37.74		45.7	45.1	9.1		7.4	
MT_20-90/S__						46.74	37.74	55.7	55.1		9.1		7.4
MT_20-100/S__						54.52		65.7	65.1	11.0		8.9	
MT_25-80/S__	74.9	47.1	55.6	42.5	40.6	37.74		45.7	45.1	10.1		8.4	
MT_25-90/S__						46.74	37.74	55.7	55.1		10.1		8.4
MT_25-100/S__						54.52		65.7	65.1	10.6		8.9	
MT_32-80/S__	78.9	47.1	63.5	50.6	40.6	37.74		45.7	45.1	9.7		7.6	
MT_32-90/S__						46.74	37.74	55.7	55.1		9.7		7.6
MT_32-100/S__						54.52		65.7	65.1	11.8		7.7	
MT_40-80/S__	90.8	54.5	72.5	59.7	44	37.74		45.7	45.1	8.4		7.2	
MT_40-90/S__						46.74	37.74	55.7	55.1		8.4		7.2
MT_40-100/S__						54.52		65.7	65.1	10.4		7.7	

* For Light Duty Ball Lock application reference page 8 and page 9

ROUND ECONOMY STYLE RETAINER

HEAVY DUTY BALL LOCK

METRIC

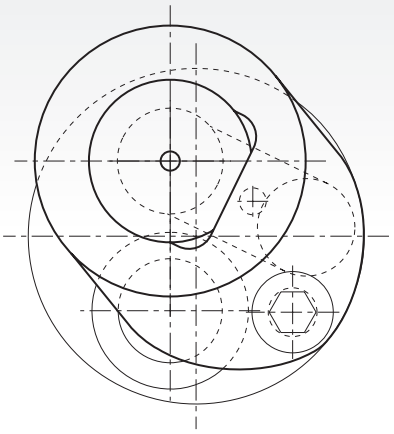

U.S. PATENT 7,581,475 • EUROPEAN PATENT 1922191 • CHINESE PATENT ZL200680033120.3 • ADDITIONAL INTERNATIONAL PATENTS PENDING

SPECIFY AT TIME OF ORDER:

- If retainer and punch are required, please purchase as additional line items at time of order.
- If panel contour is required on stripper face, please specify at time of order and provide surface data. P.O.R.
- Denote punch point dimensions at time of order for factory machining.

STANDARD UNIT

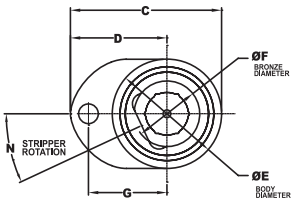

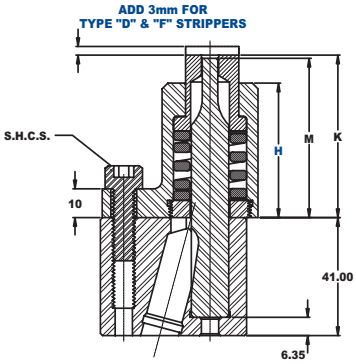

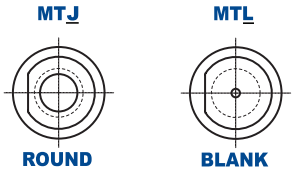

SIZE	PUNCH		PUNCH SHANK DIA.	PUNCH LENGTH			PUNCH STRIPPER			LONG REACH
METRIC	BALL LOCK			80	90	100	B	D	F	LR
M	ROUND	BLANK								
	J	L								

MTJ 10 – 80 / SB / LR

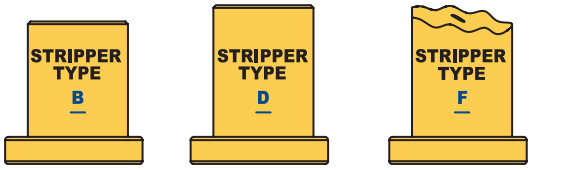

STANDARD BRONZE | LONG BRONZE FOR CONTOUR | CONTOURED BRONZE TO CUSTOMER FORM

LR
LONG REACH / COMPACT UNIT

Note: Only available in 90mm & 100mm lengths

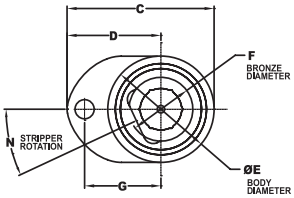

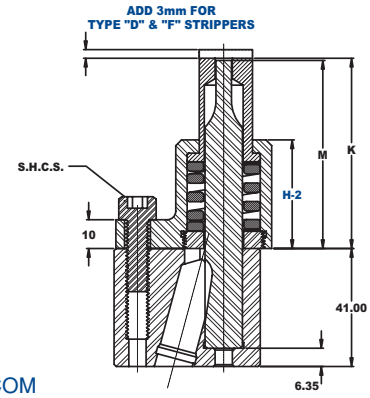

CAD FILES AVAILABLE FOR DOWNLOAD AT WWW.MOELLERPUNCH.COM

COMPLETE ASSEMBLY CATALOG NO.	C	D	E	F	G	H	H-2	K	M	N	STANDARD MAX TRAVEL FROM K-DIM. [BLUE]	LONG REACH/ COMPACT MAX TRAVEL FROM K-DIM. [BLUE]	STANDARD MAX TRAVEL FROM K-DIM [RED]	LONG REACH/ COMPACT MAX TRAVEL FROM K-DIM. [RED]	S.H.C.S.
MT_10-80/S__	40	26.5	27	15	21	37.74		45.7	45.1	22.5°	8.3		6.3		6mm x1.0 25mm LONG
MT_10-90/S__						46.74	37.74	55.7	55.1			8.3		6.3	
MT_10-100/S__						54.52		65.7	65.1		11.1		8.4		
MT_13-80/S__	46.1	29.4	33.3	20	23.9	37.74		45.7	45.1	25°	8.0		6.5		
MT_13-90/S__						46.74	37.74	55.7	55.1			8.0		6.5	
MT_13-100/S__						54.52		65.7	65.1		10.9		8.5		
MT_16-80/S__	50	30	40	27	24.5	37.74		45.7	45.1	18.5°	9.4		7.4		
MT_16-90/S__						46.74	37.74	55.7	55.1			9.4		7.4	
MT_16-100/S__						54.52		65.7	65.1		13		9.5		
MT_20-80/S__	59	36	46.1	33	29	37.74		45.7	45.1	18°	9.1		7.4		8mm x 1.25 25mm LONG
MT_20-90/S__						46.74	37.74	55.7	55.1			9.1		7.4	
MT_20-100/S__						54.52		65.7	65.1		11.0		8.9		
MT_25-80/S__	68.3	40.5	55.6	42.5	33.5	37.74		45.7	45.1	23°	10.1		8.4		
MT_25-90/S__						46.74	37.74	55.7	55.1			10.1		8.4	
MT_25-100/S__						54.52		65.7	65.1		10.6		8.9		
MT_32-80/S__	79.4	47.6	63.5	50.6	40.6	37.74		45.7	45.1	20°	9.7		7.6		
MT_32-90/S__						46.74	37.74	55.7	55.1			9.7		7.6	
MT_32-100/S__						54.52		65.7	65.1		11.8		7.7		
MT_40-80/S__	87.2	51	72.5	59.7	44	37.74		45.7	45.1	20°	8.4		7.2		
MT_40-90/S__						46.74	37.74	55.7	55.1			8.4		7.2	
MT_40-100/S__						54.52		65.7	65.1		10.4		7.7		

* For Light Duty Ball Lock application reference page 8 and page 9

STANDARD STYLE RETAINER

HEAVY DUTY BALL LOCK

INCH

TRUE STRIP™

U.S. PATENT 7,581,475 • EUROPEAN PATENT 1922191 • CHINESE PATENT ZL200680033120.3 • ADDITIONAL INTERNATIONAL PATENTS PENDING

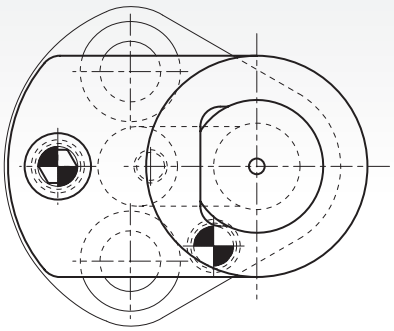

SPECIFY AT TIME OF ORDER:

- If retainer and punch are required, please purchase as additional line items at time of order.
- If panel contour is required on stripper face, please specify at time of order and provide surface data. P.O.R.
- Denote punch point dimensions at time of order for factory machining.

STANDARD UNIT

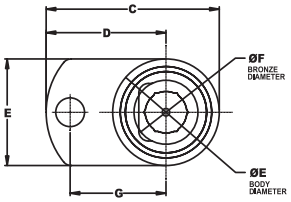

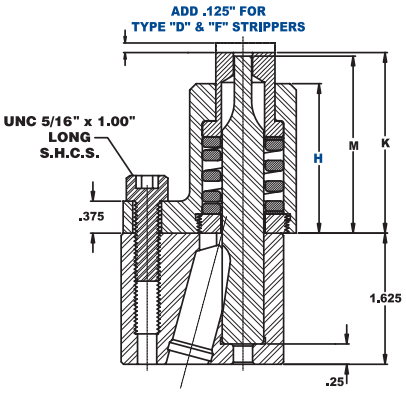

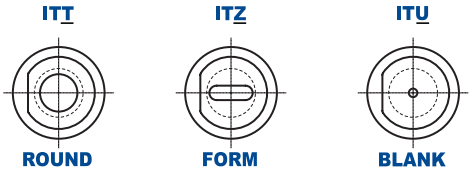

SIZE	PUNCH			PUNCH SHANK DIA.	PUNCH LENGTH			PUNCH STRIPPER			LONG REACH
INCH	BALL LOCK				325	350	400	B	D	F	LR
I	ROUND	FORM	BLANK								
	T	Z	U								

ITT 37 – 325 / SB / LR

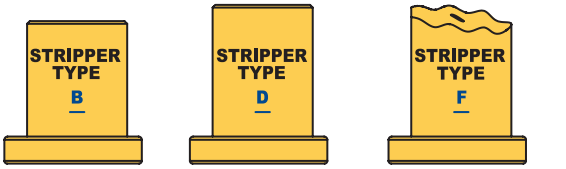

STANDARD BRONZE | LONG BRONZE FOR CONTOUR | CONTOURED BRONZE TO CUSTOMER FORM

LR
LONG REACH / COMPACT UNIT

Note: Only available in 3.50" & 4.00" lengths

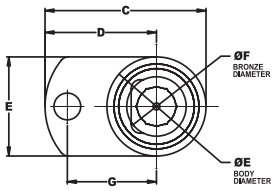

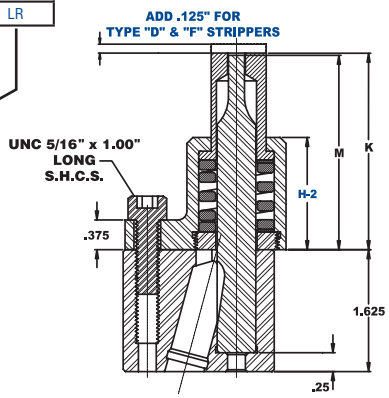

CAD FILES AVAILABLE FOR DOWNLOAD AT WWW.MOELLERPUNCH.COM

COMPLETE ASSEMBLY CATALOG NO.	C	D	E	F	G	H	H-2	K	M	STANDARD MAX TRAVEL FROM K-DIM. [BLUE]	LONG REACH/ COMPACT MAX TRAVEL FROM K-DIM. [BLUE]	STANDARD MAX TRAVEL FROM K-DIM. [RED]	LONG REACH/ COMPACT MAX TRAVEL FROM K-DIM. [RED]
IT__37-325/S__	1.87	1.34	1.06	0.59	1.06	1.47		1.91	1.88	0.33		0.25	
IT__37-350/S__						1.84	1.47	2.17	2.13		0.33		0.25
IT__37-400/S__						2.15		2.66	2.63	0.44		0.33	
IT__50-325/S__	2.13	1.48	1.31	0.79	1.18	1.47		1.91	1.88	0.32		0.26	
IT__50-350/S__						1.84	1.47	2.17	2.13		0.32		0.26
IT__50-400/S__						2.15		2.66	2.63	0.43		0.26	
IT__62-325/S__	2.31	1.52	1.57	1.06	1.25	1.47		1.91	1.88	0.37		0.29	
IT__62-350/S__						1.84	1.47	2.17	2.13		0.37		0.29
IT__62-400/S__						2.14		2.66	2.63	0.51		0.37	
IT__75-325/S__	2.58	1.67	1.81	1.3	1.32	1.47		1.91	1.88	0.36		0.29	
IT__75-350/S__						1.84	1.47	2.17	2.13		0.36		0.29
IT__75-400/S__						2.15		2.66	2.63	0.43		0.35	
IT_87-325/S__	2.68	1.73	1.91	1.38	1.4	1.49		1.91	1.88	0.40		0.29	
IT_87-350/S__						1.84	1.47	2.17	2.13		0.40		0.29
IT_87-400/S__						2.15		2.66	2.63	0.42		0.32	
IT__100-325/S__	2.95	1.86	2.19	2	1.6	1.47		1.91	1.88	0.38		0.30	
IT__100-350/S__						1.84	1.47	2.17	2.13		0.38		0.30
IT__100-400/S__						2.15		2.66	2.63	0.46		0.30	
IT__125-325/S__	3.11	1.86	2.5	2.35	1.6	1.47		1.91	1.88	0.33		0.28	
IT__125-350/S__						1.84	1.47	2.17	2.13		0.33		0.28
IT__125-400/S__						2.15		2.66	2.63	0.41		0.30	

* For Light Duty Ball Lock application reference page 8 and page 9

ROUND ECONOMY STYLE RETAINER

HEAVY DUTY BALL LOCK

INCH

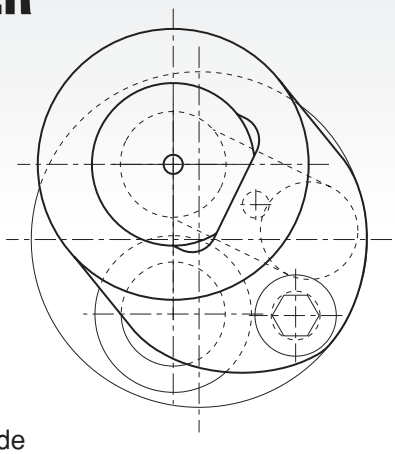

TRUE STRIP™

U.S. PATENT 7,581,475 • EUROPEAN PATENT 1922191 • CHINESE PATENT ZL200680033120.3 • ADDITIONAL INTERNATIONAL PATENTS PENDING

SPECIFY AT TIME OF ORDER:

- If retainer and punch are required, please purchase as additional line items at time of order.
- If panel contour is required on stripper face, please specify at time of order and provide surface data. P.O.R.
- Denote punch point dimensions at time of order for factory machining.

STANDARD UNIT

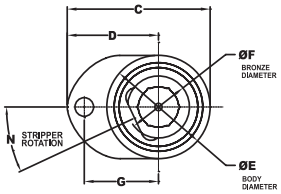

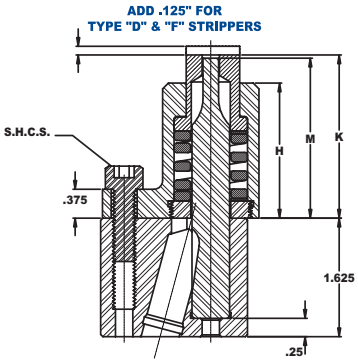

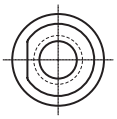

ITJ

ROUND

ITL

BLANK

SIZE	PUNCH		PUNCH SHANK DIA.	PUNCH LENGTH			PUNCH STRIPPER			LONG REACH
INCH	BALL LOCK			325	350	400	B	D	F	LR
I	ROUND	BLANK								
	J	L								

ITJ 37 – 325 / SB / LR

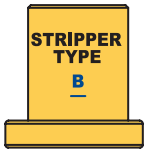

STANDARD BRONZE

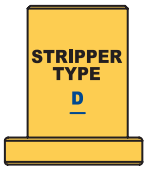

LONG BRONZE FOR CONTOUR

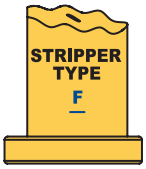

CONTOURED BRONZE TO CUSTOMER FORM

LR
LONG REACH / COMPACT UNIT

Note: Only available in 3.50" & 4.00" lengths

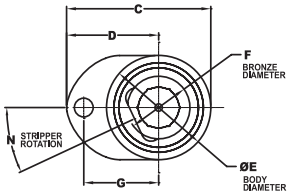

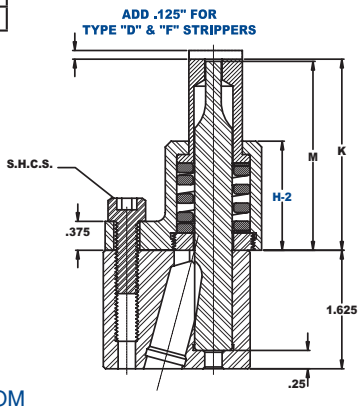

CAD FILES AVAILABLE FOR DOWNLOAD AT WWW.MOELLERPUNCH.COM

COMPLETE ASSEMBLY CATALOG NO.	C	D	E	F	G	H	H-2	K	M	N	STANDARD MAX TRAVEL FROM K-DIM. [BLUE]	LONG REACH/ COMPACT MAX TRAVEL FROM K-DIM. [BLUE]	STANDARD MAX TRAVEL FROM K-DIM. [RED]	LONG REACH/ COMPACT MAX TRAVEL FROM K-DIM. [RED]	S.H.C.S.
IT__37-325/S__						1.47		1.91	1.88		0.33		0.25		
IT__37-350/S__	1.57	1.04	1.06	0.59	0.83	1.84	1.47	2.17	2.13	22.5°		0.33		0.25	
IT__37-400/S__						2.15		2.66	2.63		0.44		0.33		
IT__50-325/S__						1.47		1.91	1.88		0.32		0.26		
IT__50-350/S__	1.81	1.16	1.31	0.79	0.94	1.84	1.47	2.17	2.13	25°		0.32		0.26	1/4" x 20 1.00 LONG
IT__50-400/S__						2.15		2.66	2.63		0.43		0.26		
IT__62-325/S__						1.47		1.91	1.88		0.37		0.29		
IT__62-350/S__	1.99	1.21	1.57	1.06	1	1.84	1.47	2.17	2.13	24.5°		0.37		0.29	
IT__62-400/S__						2.14		2.66	2.63		0.51		0.37		
IT__75-325/S__						1.47		1.91	1.88		0.36		0.29		
IT__75-350/S__	2.34	1.44	1.81	1.3	1.18	1.84	1.47	2.17	2.13	22.0°		0.36		0.29	
IT__75-400/S__						2.15		2.66	2.63		0.43		0.35		
IT_87-325/S__						1.49		1.91	1.88		0.40		0.29		
IT_87-350/S__	2.46	1.5	1.91	1.38	1.25	1.84	1.49	2.17	2.13	21.0°		0.40		0.29	
IT_87-400/S__						2.15		2.66	2.63		0.42		0.32		
IT_100-325/S__						1.47		1.91	1.88		0.38		0.30		
IT_100-350/S__	2.69	1.59	2.18	2	1.32	1.84	1.47	2.17	2.13	23°		0.38		0.30	5/16" x 18 1.00 LONG
IT_100-400/S__						2.15		2.66	2.63		0.46		0.30		
IT_125-325/S__						1.47		1.91	1.88		0.33		0.28		
IT_125-350/S__	3.12	1.87	2.5	2.35	1.6	1.84	1.47	2.17	2.13	20°		0.33		0.28	
IT_125-400/S__						2.15		2.66	2.63		0.41		0.30		

* For Light Duty Ball Lock application reference page 8 and page 9

SHOULDER STYLE & LIGHT DUTY BALL LOCK RETAINERS

METRIC

TRUE STRIP™

U.S. PATENT 7,581,475 • EUROPEAN PATENT 1922191
CHINESE PATENT ZL200680033120.3 • ADDITIONAL INTERNATIONAL PATENTS PENDING

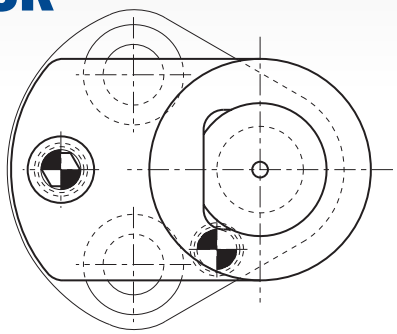

SPECIFY AT TIME OF ORDER:

- If retainer and punch are required, please purchase as additional line items at time of order.
- If panel contour is required on stripper face, please specify at time of order and provide surface data. P.O.R.
- Denote punch point dimensions at time of order for factory machining.

STANDARD UNIT

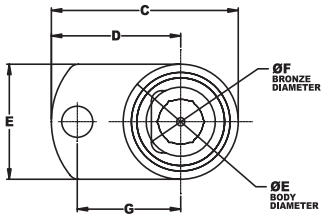

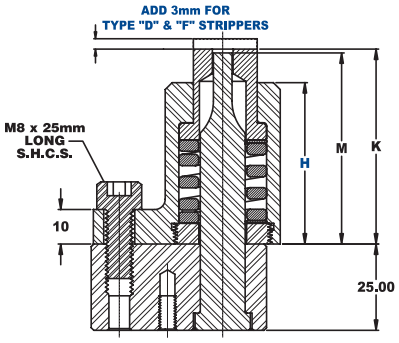

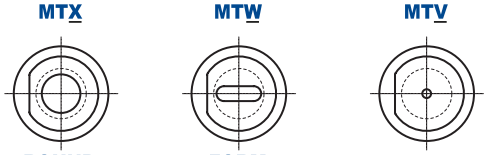

SIZE	PUNCH			PUNCH SHANK DIA.	PUNCH LENGTH			PUNCH STRIPPER			LONG REACH
	SHOULDER STYLE										
METRIC	ROUND	FORM	BLANK		71	80	90	B	D	F	LR
M	X	W	V								

MTX 10 – 71 / SB / LR

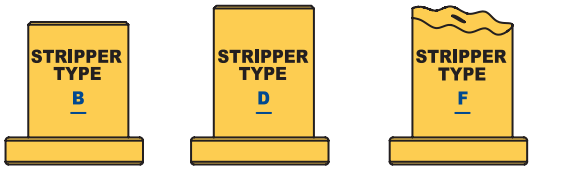

STANDARD BRONZE | LONG BRONZE FOR CONTOUR | CONTOURED BRONZE TO CUSTOMER FORM

LR
LONG REACH / COMPACT UNIT

Note: Only available in 80mm & 90mm lengths

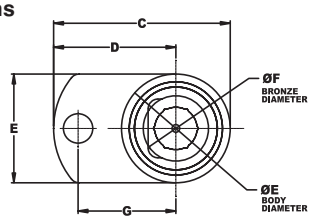

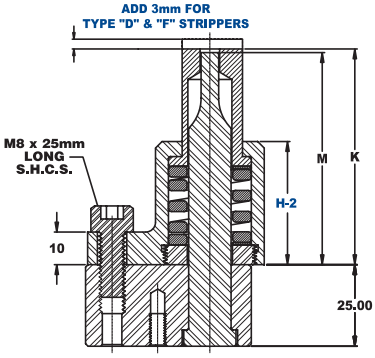

CAD FILES AVAILABLE FOR DOWNLOAD AT WWW.MOELLERPUNCH.COM

COMPLETE ASSEMBLY CATALOG NO.	C	D	E	F	G	H	H-2	K	M	STANDARD MAX TRAVEL FROM K-DIM. [BLUE]	LONG REACH/ COMPACT MAX TRAVEL FROM K-DIM. [BLUE]	STANDARD MAX TRAVEL FROM K-DIM. [RED]	LONG REACH/ COMPACT MAX TRAVEL FROM K-DIM. [RED]
MT_10-71/S__	47.4	33.9	27	15	26.9	37.74		46.6	46	8.3		6.3	
MT_10-80/S__						46.74	37.74	55.6	55		8.3		6.3
MT_10-90/S__						54.52		65.6	65	11.1		8.4	
MT_13-71/S__	54.1	37.5	32.3	20	30	37.74		46.6	46	8.0		6.5	
MT_13-80/S__						46.74	37.74	55.6	55		8.0		6.5
MT_13-90/S__						54.52		65.6	65	10.9		8.5	
MT_16-71/S__	58.7	38.7	40	27	31.8	37.74		46.6	46	9.4		7.4	
MT_16-80/S__						46.74	37.74	55.6	55		9.4		7.4
MT_16-90/S__						54.52		65.6	65	13		9.5	
MT_20-71/S__	65.4	42.4	46.1	33	33.5	37.74		46.6	46	9.1		7.4	
MT_20-80/S__						46.74	37.74	55.6	55		9.1		7.4
MT_20-90/S__						54.52		65.6	65	11.0		8.9	
MT_25-71/S__	74.9	47.1	55.6	42.5	40.6	37.74		46.6	46	10.1		8.4	
MT_25-80/S__						46.74	37.74	55.6	55		10.1		8.4
MT_25-90/S__						54.52		65.6	65	10.6		8.9	
MT_32-71/S__	78.9	47.1	63.5	50.6	40.6	37.74		46.6	46	9.7		7.6	
MT_32-80/S__						46.74	37.74	55.6	55		9.7		7.6
MT_32-90/S__						54.52		65.6	65	11.8		7.7	

SHOULDER STYLE & LIGHT DUTY BALL LOCK RETAINERS

INCH

TRUE STRIP™

U.S. PATENT 7,581,475 • EUROPEAN PATENT 1922191
CHINESE PATENT ZL200680033120.3 • ADDITIONAL INTERNATIONAL PATENTS PENDING

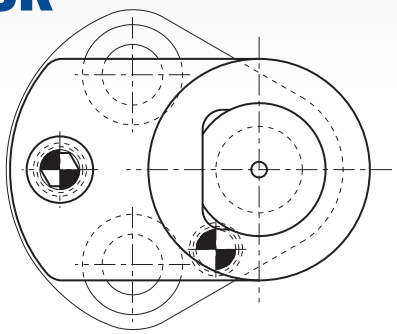

SPECIFY AT TIME OF ORDER:

- If retainer and punch are required, please purchase as additional line items at time of order.
- If panel contour is required on stripper face, please specify at time of order and provide surface data. P.O.R.
- Denote punch point dimensions at time of order for factory machining.

STANDARD UNIT

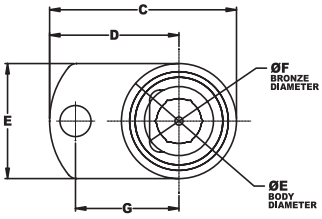

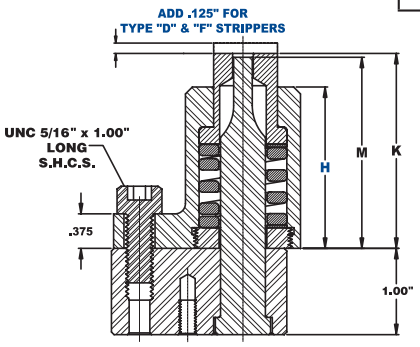

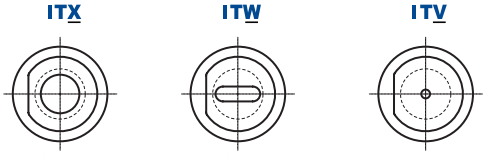

SIZE	PUNCH			PUNCH SHANK DIA.	PUNCH LENGTH			PUNCH STRIPPER			LONG REACH
	SHOULDER STYLE										
INCH	ROUND	FORM	BLANK		300	325	350	B	D	F	LR
I	X	W	V								

ITX 37 – 300 / SB / LR

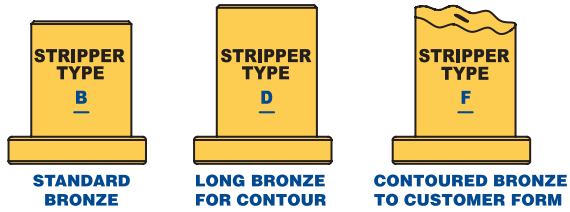

LR
LONG REACH / COMPACT UNIT

Note: Only available in 3.50" & 4.00" lengths

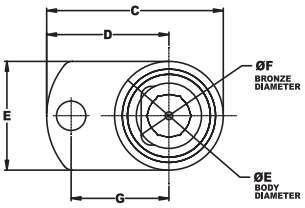

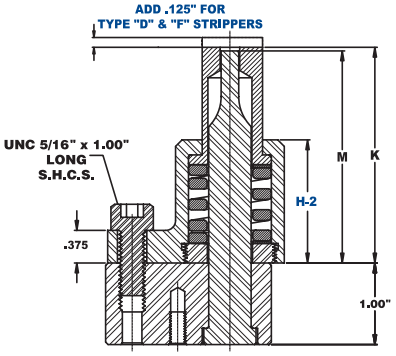

CAD FILES AVAILABLE FOR DOWNLOAD AT WWW.MOELLERPUNCH.COM

COMPLETE ASSEMBLY CATALOG NO.	C	D	E	F	G	H	H-2	K	M	STANDARD MAX TRAVEL FROM K-DIM. [BLUE]	LONG REACH/ COMPACT MAX TRAVEL FROM K-DIM. [BLUE]	STANDARD MAX TRAVEL FROM K-DIM. [RED]	LONG REACH/ COMPACT MAX TRAVEL FROM K-DIM. [RED]
IT_37-300/S__	1.87	1.34	1.06	0.59	1.06	1.47	1.47	2.03	2	0.33	0.33	0.25	0.25
IT_37-325/S__						1.84		2.27	2.25				
IT_37-350/S__						2.15		2.52	2.5	0.44		0.33	
IT_50-300/S__	2.13	1.48	1.31	0.79	1.18	1.47	1.47	2.03	2	0.32	0.32	0.26	0.26
IT_50-325/S__						1.84		2.27	2.25				
IT_50-350/S__						2.15		2.52	2.5	0.43		0.26	
IT_62-300/S__	2.31	1.52	1.57	1.06	1.25	1.47	1.47	2.03	2	0.37	0.37	0.29	0.29
IT_62-325/S__						1.84		2.27	2.25				
IT_62-350/S__						2.14		2.52	2.5	0.51		0.37	
IT_75-300/S__	2.58	1.67	1.81	1.3	1.32	1.47	1.47	2.03	2	0.36	0.36	0.29	0.29
IT_75-325/S__						1.84		2.27	2.25				
IT_75-350/S__						2.15		2.52	2.5	0.43		0.35	
IT_87-300/S__	2.68	1.73	1.91	1.38	1.4	1.47	1.47	2.03	2	0.40	0.40	0.29	0.29
IT_87-325/S__						1.84		2.27	2.25				
IT_87-350/S__						2.15		2.52	2.5	0.42		0.32	
IT_100-300/S__	2.95	1.86	2.19	2	1.6	1.47	1.47	2.03	2	0.38	0.38	0.30	0.30
IT_100-325/S__						1.84		2.27	2.25				
IT_100-350/S__						2.15		2.52	2.5	0.46		0.30	
IT_125-300/S__	3.11	1.86	2.5	2.35	1.6	1.47	1.47	2.03	2	0.33	0.33	0.28	0.28
IT_125-325/S__						1.84		2.27	2.25				
IT_125-350/S__						2.15		2.52	2.5	0.41		0.30	

TECHNICAL FEATURES & APPLICATION NOTES

Ordering:

- Unless optional spring is specified at time of order, all stripper units are shipped with blue-medium load springs.
- Standard style True-Strip units are adaptable to all industry standard ball lock and shoulder style retainers. The round economy style True-Strip units only adapt to the exclusive Moeller Round Economy Ball Lock Retainers.
- Please specify punch point dimensions when ordering True-Strip units. When machining True-Strip units in-house the factory recommended clearance between the stripper and the punch is .3mm per side for metric units and .012" for inch units.

Design/Application:

- Maximum punch entry is calculated by subtracting the difference of M and K dimensions from the published maximum travel.
- Standard design offers up to a 15° maximum pierce angle. Consult factory for special applications.
- Long Reach/Compact True-Strip units offer more clearance between the top of the bronze and the top of the housing, allowing the unit to function in close spaces.
- For custom multi-hole True-Strip unit applications consult factory.
  Reference Page 2 for examples.
- The Moeller True-Strip unit may be utilized as a punch guide for piercing when material thickness is large relative to the size of the punch point, or when piercing small holes at an angle applying side load and resulting in punch breakage.

Installation:

- The spring cap must be tightened to its positive stop to provide a flush mounting surface. If the cap is not fully engaged the True-Strip unit will not function properly.
- Standard hex wrench tools can be utilized for installation or removal of spring caps. Please reference hex tool sizes in the charts of this brochure. Moeller offers a unique universal hex tool that can be used for all sizes for removal of spring cap. Reference page 11.
- The spring may shift during installation of the spring cap creating interference during punch installation. The spring may be realigned by slightly tapping the stripper unit onto the punch.
- The designed overall length of each True-Strip unit is critical to prevent over stroking. All in-house alterations may result in failure if the proper amount of material is not removed from the face of the stripper.

Note: Moeller reserves the right to modify, correct or improve this literature without notice.

OPTIONAL STRIPPING FORCE SPRING SELECTION CHART

STRIPPER UNIT CATALOG INCH/METRIC	SUPER-LIGHT LOAD SPRING CATALOG NUMBER	STRIPPING FORCE		LIGHT LOAD SPRING CATALOG NUMBER	STRIPPING FORCE		UNLESS SPECIFIED STANDARD SPRING MEDIUM LOAD SPRING CATALOG NUMBER	STRIPPING FORCE		HEAVY LOAD SPRING CATALOG NUMBER	STRIPPING FORCE	
		RATE PER MM	MAX DEF.		RATE PER MM	MAX DEF.		RATE PER MM	MAX DEF.		RATE PER MM	MAX DEF.
IT__37-325/S__ MT__10-80/S__ IT__37-350/S__ MT__10-90/S__	RTS75-100	5LBS 22N	26LBS 166N	RLL75-100	13LBS 56N	95LBS 424N	RML75-100	22LBS 98N	210LBS 938N	RHL75-100	49LBS 216N	370LBS 1650N
IT__37-400/S__ MT__10-100/S__	RTS75-125	4LBS 18N	40LBS 180N	RLL75-125	10LBS 45N	101LBS 449N	RML75-125	16LBS 73N	203LBS 926N	RHL75-125	38LBS 168N	380LBS 1690N
IT__50-325/S__ MT__13-80/S__ IT__50-350/S__ MT__13-90/S__	RTS100-100	9LBS 40N	70LBS 310N	RLL100-100	23LBS 100N	175LBS 777N	RML100-100	33LBS 147N	306LBS 1363N	RHL100-100	84LBS 375N	653LBS 2903N
IT__50-400/S__ MT__13-100/S__	RTS100-125	7LBS 32N	72LBS 323N	RLL100-125	41LBS 80N	181LBS 807N	RML100-125	27LBS 118N	337LBS 1474N	RHL100-125	67LBS 297N	676LBS 3007N
IT__62-325/S__ MT__16-80/S__ IT__62-350/S__ MT__16-90/S__	RTS125-100	10LBS 46N	95LBS 422N	RTL125-100	26LBS 115N	237LBS 1054N	RTM125-100	43LBS 192N	459LBS 2049N	RTH125-100	86LBS 383N	746LBS 3317N
IT__62-400/S__ MT__16-100/S__	RTS125-150	8LBS 37N	34LBS 151N	RLL125-150	21LBS 94N	241LBS 1072N	RML125-150	42LBS 185N	626LBS 2757N	RHL125-150	87LBS 388N	992LBS 4412N
IT__75-325/S__ MT__20-80/S__ IT__75-350/S__ MT__20-90/S__	RTS175-100	13LBS 58N	112LBS 497N	RTL175-100	32LBS 144N	277LBS 1234N	RTM175-100	54LBS 240N	560LBS 2491N	RTH175-100	108LBS 480N	936LBS 4165N
IT__75-400/S__ MT__20-100/S__	RTS175-125	13LBS 58N	126LBS 562N	RTL175-125	32LBS 144N	313LBS 1395N	RTM175-125	56LBS 240N	705LBS 3136N	RTH175-125	108LBS 480N	1133LBS 5039N
IT__87-325/S__ N/A IT__87-350/S__ N/A	RTS200-100	14LBS 64N	125LBS 555N	RTL200-100	36LBS 159N	310LBS 1378N	RTM200-100	60LBS 265N	688LBS 3061N	RTH200-100	119LBS 530N	1032LBS 4589N
IT__87-400/S__ N/A	RTS200-125	14LBS 64N	139LBS 620N	RTL200-125	36LBS 159N	346LBS 1540N	RTM200-125	60LBS 265N	737LBS 3280N	RTH200-125	119LBS 530N	1153LBS 5129N
IT__100-325/S__ MT__25-80/S__ IT__100-350/S__ MT__25-90/S__	RTS215-100	15LBS 68N	149LBS 664N	RTL215-100	38LBS 171N	375LBS 1670N	RTM215-100	64LBS 285N	728LBS 3237N	RTH215-100	128LBS 570N	1238LBS 5506N
IT__100-400/S__ MT__25-100/S__	RTS215-125	21LBS 92N	225LBS 1002N	RTL215-125	41LBS 180N	440LBS 1960N	RTM215-125	64LBS 285N	780LBS 3470N	RTH215-125	135LBS 600N	1404LBS 6245N
IT__125-325/S__ MT__32-80/S__ IT__125-350/S__ MT__32-90/S__	RTS225-100	21LBS 92N	185LBS 825N	RTL225-100	52LBS 230N	464LBS 2063N	RTM225-100	86LBS 383N	943LBS 4167N	RTH225-100	172LBS 767N	1526LBS 6788N
IT__125-400/S__ MT__32-100/S__	RTS225-125	21LBS 92N	192LBS 854N	RTL225-125	52LBS 230N	480LBS 2136N	RTM225-125	86LBS 383N	1152LBS 5122N	RTH225-125	172LBS 767N	1598LBS 7108N
N/A MT__40-80/S__ N/A MT__40-90/S__	RTS275-100	26LBS 115N	229LBS 1020N	RTL275-100	65LBS 288N	574LBS 2554N	RTM275-100	108LBS 480N	1044LBS 4646N	RTH275-100	216LBS 960N	1830LBS 8138N
N/A MT__40-100/S__	RTS275-125	26LBS 115N	237LBS 1057N	RTL275-125	65LBS 288N	595LBS 2646N	RTM275-125	108LBS 480N	1295LBS 5760N	RTH275-125	216LBS 960N	2007LBS 8926N
	Light Green			Green			Blue			Red		

NEWTONS/LBS CONVERSION: 1 NEWTON = .2248089 LBS.

Alternate Spring Load Order Example: MTT013-090/SB Red

MAINTENANCE HEX TOOL
(FOR SPRING REPLACEMENT)
CATALOG NO. METRIC: MTA01
INCH: ITA01